OUTR

MALAGA

USER AND INSTALLATION MANUAL

Warning

PLEASE READ CAREFULLY THE FOLLOWING SAFETY GUIDELINES BEFORE OPERATION.
BEFORE INSTALLATION AND OPERATION, PLEASE READ THE MANUAL CAREFULLY.
REPAIRS SHOULD ONLY BE CARRIED OUT BY QUALIFIED SERVICE PERSONNEL

- This device must be installed and the gas cylinder must be stored in accordance with the regulations in force.
- Do not block the ventilation openings of the cylinder housing.
- Do not move the unit when in operation.
- Close the valve of the gas tank or the regulator before moving the unit.
- The pipe or the flexible hose must be changed within the prescribed intervals.
- Use only the type of gas and the type of cylinder specified by the manufacturer.
- In case of strong wind, special attention should be taken against tilting of the unit.
- Do not use this device indoors as it may cause personal injury or property damage.
- This outdoor heater is not intended to be installed on recreational vehicles and/or boats.
- The device must be placed on a solid surface.
- Maintenance and repair must be carried out by a qualified person.
- Improper installation, adjustment, modification may cause personal injury or property damage.
- Do not attempt to modify the unit in any way.
- Never replace or modify the regulator with any regulator other than the factory suggested replacement.
- Do not store or use gasoline or other flammable vapors or liquids in the heater unit.
- The entire gas system, hose, regulator, pilot flame or burner must be checked for leaks or damage before use and at least annually by a qualified service technician.
- All leak tests must be carried out using a soapy solution. Never use an open flame to check for leaks.
- Do not use the patio heater until all connections have been tested for leaks.
- Turn off the gas valve immediately if gas smell is detected.
- Do not transport the patio heater while it is in operation.
- Do not move it after it has been switched off before the temperature has cooled down.
- The control compartment, burner and air passages of this patio heater should be kept clean.
- Regular cleaning may be required.
- The LPG tank should be turned off when not in use.
- Check the heater immediately if any of the following situations occur:
  - The heater does not reach the temperature.
  - The burner makes a plopping noise during operation (a slight noise is normal when the burner goes out).
  - Odour of gas in combination with extreme yellow tops on the burner flames.
- The LPG regulator / hose assembly must be located in the tank cabinet where the LPG tank is located.
- Any guards or other protective devices removed for maintenance of the heater must be replaced before the heater is used.
- Adults and children should stay away from high-temperature surfaces to avoid burns or clothing inflammation.
- Children should be supervised when they are near the patio heater.
- Clothing or other flammable materials should not be hung on or placed near the heater.

OUTDOOR CAMPUS | KORTRIJKSESTEENWEG 1266 | 9051 GENT | BELGIUM | info@outr.be

Assembly instructions

Remove the heater body and all components from the box and follow the procedures below.

STEP 1 – Attach the cabinet handle

Enclosed cabinet screw handle (knob shown as below, can be black or grey)

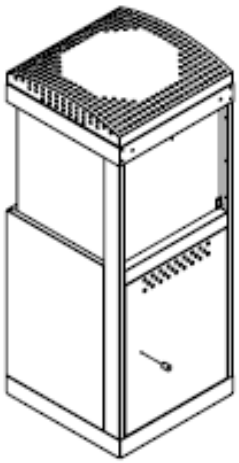

STEP 2 – Attach the unit's handle

Attach the handle of the unit to the back of the unit with a flat screwdriver.

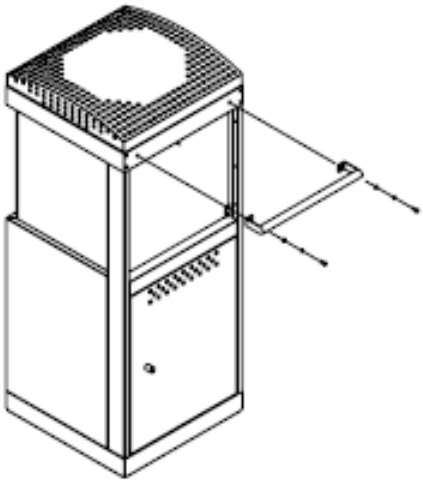

STEP 3 – Attach the swivel castors

With at least two people, carefully lay the unit on its side to attach the swivel castors.
Using a flat screwdriver, fasten the swivel castors to the bottom of the unit with the screws and washers supplied.

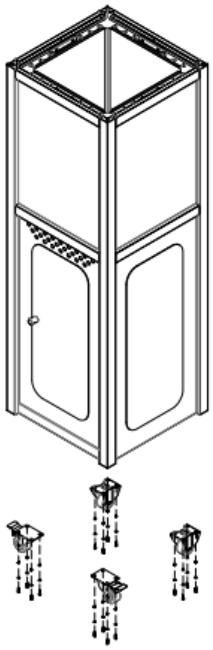

STEP 4 – Remove the rear safety glass

Use the safety clip at the top of the rear safety glass, loosen the glass and pull it down slowly using the hinges.

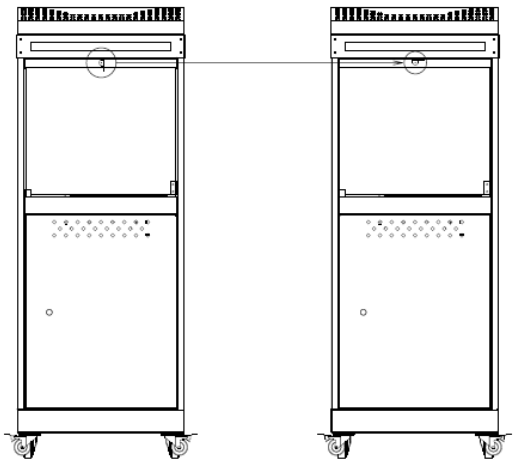

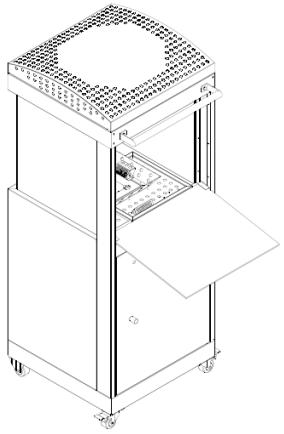

OUTDOOR CAMPUS | KORTRIJKSESTEENWEG 1266 | 9051 GENT | BELGIUM | info@outr.be

STEP 5 – Adding fuel bed

Take the ceramic logs out of the box. Place the ceramic logs according to the following pictures.

Heating setting and location

- The stove is for outdoor use only. Always ensure that there is sufficient fresh air ventilation is provided.
- Always keep a sufficient distance, at least 2 metres, from flammable materials.
- The patio heater must be placed on a flat, solid surface.
- Never use the heater in explosive atmospheres such as in areas where gasoline or other flammable liquids or vapours.
- Close the gas valve on the cylinder after each use.
- The stove must be protected from strong winds by braking the wheel

Gas requirements

- Use only liquid propane gas.
- The pressure regulator and hose to be used must comply with local standard codes.
- The installation must comply with local codes or, in the absence of local codes, with the standard for the storage and handling of liquefied petroleum gases.
- A dented, rusted or damaged propane tank can be dangerous and should be checked by your tank supplier. Never use a propane tank with a damaged valve connection.
- The propane tank should be located so that vapour can be drawn from the operating cylinder.
- Never connect an unregulated propane tank to the stove.
- Replace the gas cylinder in a well-ventilated area, away from all sources of ignition (candles, cigarettes, other flame-producing devices, etc.).
- Check that the regulator seal is correctly fitted and able to function.
- Do not obstruct the ventilation openings of the cylinder housing.
- Instructions in case of gas leaks; for example: in case of gas leaks, the device must not be used or lit, shut off the gas supply and the appliance must be examined and rectified before being used again.
- The recommended frequency of checking the pipe and the flexible hose (at least once a month and every time the cylinder is changed). If it shows signs of tears, splitting or other deterioration, it should be exchanged for a new hose of the same length and equivalent quality.

OUTDOOR CAMPUS | KORTRIJKSESTEENWEG 1266 | 9051 GENT | BELGIUM | info@outr.be

Gas tank, regulator and hose

This unit is only suitable for use with low-pressure butane or propane gas and fitted with the appropriate low-pressure regulator via a flexible hose. The hose must be attached to the regulator and the device with hose clamps or nuts. This patio heater is set to operate on a 28 mbar regulator with butane gas and a 37 mbar regulator with propane gas and a regulator with butane/propane mixture regulator at 50 mbar and butane/propane mixture regulator at 30 mbar. Use a suitable regulator that is BSEN-certified 16129: 2013. Consult your dealer for information on a suitable regulator for the gas cylinder.

1 . Controller and hose

Only use regulators and hoses that are approved for LPG at the above mentioned pressures. The life expectancy of the regulator is estimated at 10 years. It is recommended that the regulator be replaced within 10 years of the date of manufacture. Using the wrong regulator or hose is unsafe; always check that you have the correct items for operating the stove. The hose used must comply with the relevant standard of the country of use. The life expectancy of the hose is estimated at 10 years. It is recommended that the hose be replaced within 10 years of the date of manufacture. Check the date of manufacture on the hose. The length of the hose should be (maximum) 1.5 metres. Worn or damaged hoses must be replaced. Make sure that the hose is not clogged, kinked, or allowed to come into contact with any part of the heater other than the connector. The hose should not be twisted or kinked when attached to the gas cylinder. No part of the hose should touch any part of the appliance. So place the cylinder out to the left side of the appliance at the maximum distance allowed by the hose length.

2. Gas tank

The maximum diameter and the maximum height of the cylinder as shown in (figure 1). The unit can be used with any gas cylinder of weights between 4.5kgs and 13KGS butane and 3.9KGS to 1 1 KGS propane . The gas cylinder must not be set down or handled roughly! When the device is not in use, the cylinder must be disconnected. Place the protective cap back on the cylinder after disconnecting it from the device. Cylinders should be stored outside in an upright position and out of reach of children. The cylinder should never be stored where the temperature can exceed 50° C. Do not store the cylinder near flames, pilot flames or other sources of ignition. DO NOT SMOKE IN THE VICINITY.

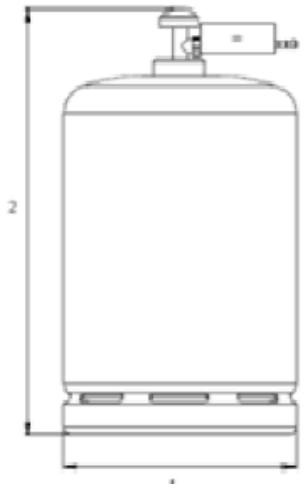

figure 1

1. Maximum diameter or width: 305 mm
2. Maximum height (including regulator): 550 mm

OUTDOOR CAMPUS | KORTRIJKSESTEENWEG 1266 | 9051 GENT | BELGIUM | info@outr.be

Leakage test

Gas connections to the stove are tested for leaks at the factory before shipment. A complete gas tightness test must be carried out at the installation site due to possible misuse during shipment or excessive pressure on the stove.

- Make a soap solution of one part liquid detergent and one part water.
  The soap solution can be applied with a spray bottle, brush or cloth.
  Soap bubbles appear in the event of a leak.
- The stove must be checked with a full cylinder.
- Ensure that the safety valve is in the OFF position.
- Turn the gas supply ON.
- In the event of a leak, shut off the gas supply. Tighten leaking fittings, then switch
  Then turn on the gas supply and check again.
- Never perform a leak test while smoking.

Heating instructions

- Open the cabinet door, place the gas cylinder in the cabinet.
  Turn the control knob clockwise to the "OFF" position.
- Connect the regulator to the gas cylinder. Turn the gas supply "ON" on the cylinder. Check with using soapy water whether there are any gas leaks between the cylinder and the regulator.
- Press the regulator knob down and keep pressing while turning anticlockwise to the position "Ignition" (you will hear a click), this will light the pilot light. If not, repeat this process.
- When the pilot flame is lit, hold the control knob down for 5 seconds and then release it.
- If the burner does not light, repeat steps 3 and 4. If the burner still does not light, wait for 5 minutes and then repeat steps 3 and 4 again.
- Adjust the heat setting by turning the control knob to the high or low position.
- To turn the stove 'OFF', turn the cylinder valve or regulator switch to the 'OFF' position and then turn the control knob on the unit clockwise to the 'OFF' position.

WARNING:
If the burner does not ignite, turn the control knob off (clockwise) and also close the cylinder valve. Wait five minutes before attempting to re-light using the ignition sequence.

Cleaning and maintenance

Make sure that cleaning is done after the heater has been switched off and cooled down.
Wipe powder-coated surfaces with a soft, damp cloth.
Do not clean the stove with flammable or caustic cleaning agents.
Remove dirt from the burner to keep it clean and safe for use.
Open the upper rear door to carefully clean away any dirt on the glass.

OUTDOOR CAMPUS | KORTRIJKSESTEENWEG 1266 | 9051 GENT | BELGIUM | info@outr.be

Storage

1. Always close the gas valve of the gas bottle after use or in the event of a malfunction.
2. Remove the pressure regulator and the hose.
3. Check the gas valve for leaks and damage. If you suspect any damage, have it replaced by your gas dealer.
4. Never store the gas bottle underground or in places without adequate ventilation.

Troubleshooting

PROBLEM	CAUSE	SOLUTION
The pilot flame does not light	The gas valve may be off	Turn the gas valve ON
	Tank empty	Refill the LPG tank
	Opening blocked	Clean or replace opening
	Air in the supply system	Flush the air out of the pipes
	Loose connections	Tighten connections
The pilot flame does not stay lit	Debris around the pilot flame	Clean the dirty area
	Loose connections	Tighten connections
	Bad thermocouple	Replace the thermocouple
	Gas leak in the pipe	Check connections
	Lack of fuel pressure	Tank almost empty. Refill LPG tank
The burner does not want to burn	The pressure is low	Tank almost empty. Refill LPG tank
	Opening blocked	Remove and clean
	Control not ON	Switch the valve to ON
	Bad thermocouple	Replace the thermocouple
	Pilot flame bent	Replace pilot flame correctly
	Not in a proper location	Reposition correctly and try again

OUTDOOR CAMPUS | KORTRIJKSESTEENWEG 1266 | 9051 GENT | BELGIUM | info@outr.be

Device manufactured by	OUTDOOR CAMPUS BVBA			
Application	Mobile Outdoor Patio Heater			
Model	MALAGA			
Total heat input: on	8.50 kW (618.5 g/h)			
Gas categories	□I3B/P(30)	□I3+(28-30/37)		□I3B/P(50)
Gas type/Gas pressure	G30 Butane and G31 Propane at 30mbar	G30 Butane at 28-30mbar	G31 Propane at 37mbar	G30 Butane and G31 Propane at 50mbar
Injector size	1.45 mm	1.45 mm		1.26 mm
Dimensions	134,5 x 50 x 50 cm			
Weight	48 kg			
Countries of destination	AL, BE, BG, CY, CZ, DK, EE, FI, FR, HR, HU, IS, IT, LT, LU, MT, MK, NL, NO, RO, SK, SI, SE, TR.	BE, CH, CY, CZ, ES, FR, GB, GR, IE, IT, LT, LU, LV, PT, SK, SI.		AT, DE, SK, CH
Identification code	0063CS7894			
Serial number	11-0000000			
For use outdoors or in empty ventilated rooms				
This device is not for domestic use				
Warning: accessible parts can be very hot; keep children away				
Read the instruction manual before using the device; the device must be installed in accordance with the instructions and local regulations				
Close the valve of the gas cylinder or the regulator after use				
Using this device in confined spaces can be dangerous and is prohibited.				
Empty ventilated rooms must have at least 25% of the surface area open. The surface area is the sum of the wall surface.				
CE 0063-17 PIN NO: 0063CS7894				

OUTR
KORTRIJKSESTEENWEG 1266
9051 GENT
BELGIUM
info@outr.be

ENTER THE OUTSIDE